ACCENT RADAR - MR16 LAMP

LED LAMPS

The RADAR MR16 bulb is a 4.0W mini reflector lamp encased within a heat sink housing and has a size of Ø50mm X 46mm. This bulb can emit the high brightness levels of the OPTILED LED (Light-Emitting-Diode) while maintaining a high efficiency rating.

Applications:
1. Cabinet display
2. Museum display
3. Ceiling fixture
4. Restaurant lobby

Features	Benefits
1. Equipped radar heat sink	Longer rated life span and appropriate for track lighting systems
2. Changeable diffuser	Select beam as per desired effect

CREE LEDs

Diffuser (4)

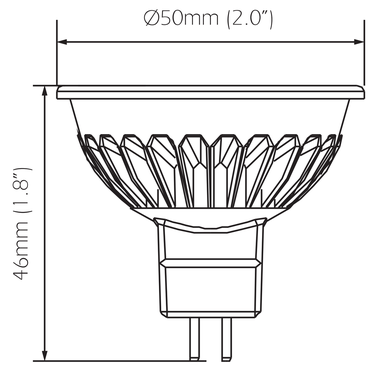

GU 5.3 Base

Light Distribution Curve -10°

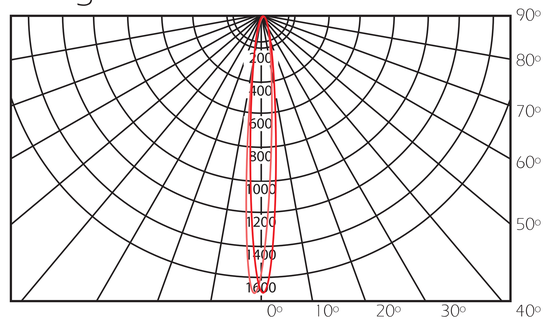

Lux Diagram (lx)

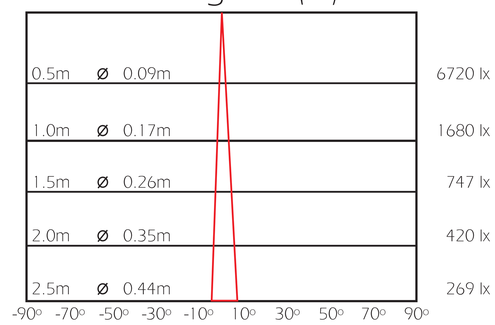

131106BBAA - Daylight

Light Distribution Curve -10°

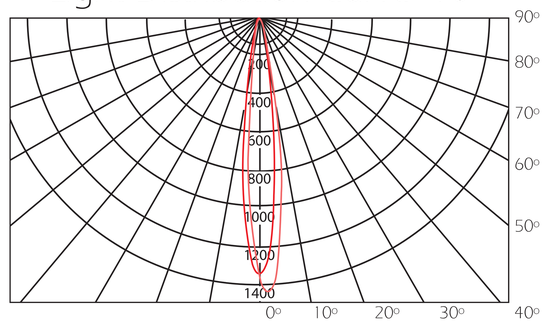

Lux Diagram (lx)

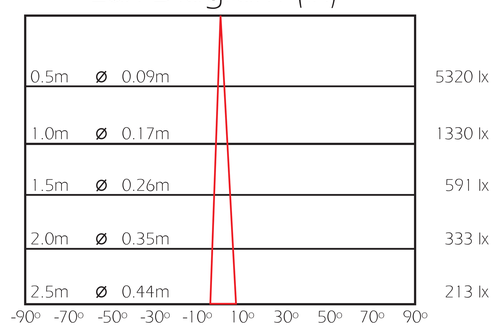

131105BBAA - Warm White

Part No.	Color	Color Temp (3)	Lumen (lm)	Central Intensity	CRI
131105BBAA	Warm White	2800K	65	1330	80
131106BBAA	Daylight	6000K	85	1680	80

BB indicataed lamp base: 08 = GU5.3 ; 16 = EZ10
AA indicated approval applicable (and packing detail) : 05 = CE version ; 17 = UL version

Diffuser
40mm Clear 4 Deg
*40mm Clear 10 Deg
40mm Clear 16 Deg
40mm Clear 25 Deg
40mm Clear 50 Deg
40mm Clear 80 Deg
40mm Clear 2x70 Deg
40mm Clear 10x60 Deg

* included in lamp packing

12V DC / AC | 50/60 Hz | 4W | Operation Temp -20˚C ~ 55˚C | up to 35,000 hours | RoHS

(1) For indoor use only.
(2) Contents and specifications are subject to change without prior notice.
(3) Color Temp (Typical).
(4) Different diffuser can be applied to this product to produce different light beam effects.

OPTILED

www.optiled.com

Copyright © 2009 OptiLED. All Rights Reserved.

OLED-LF044/07/09